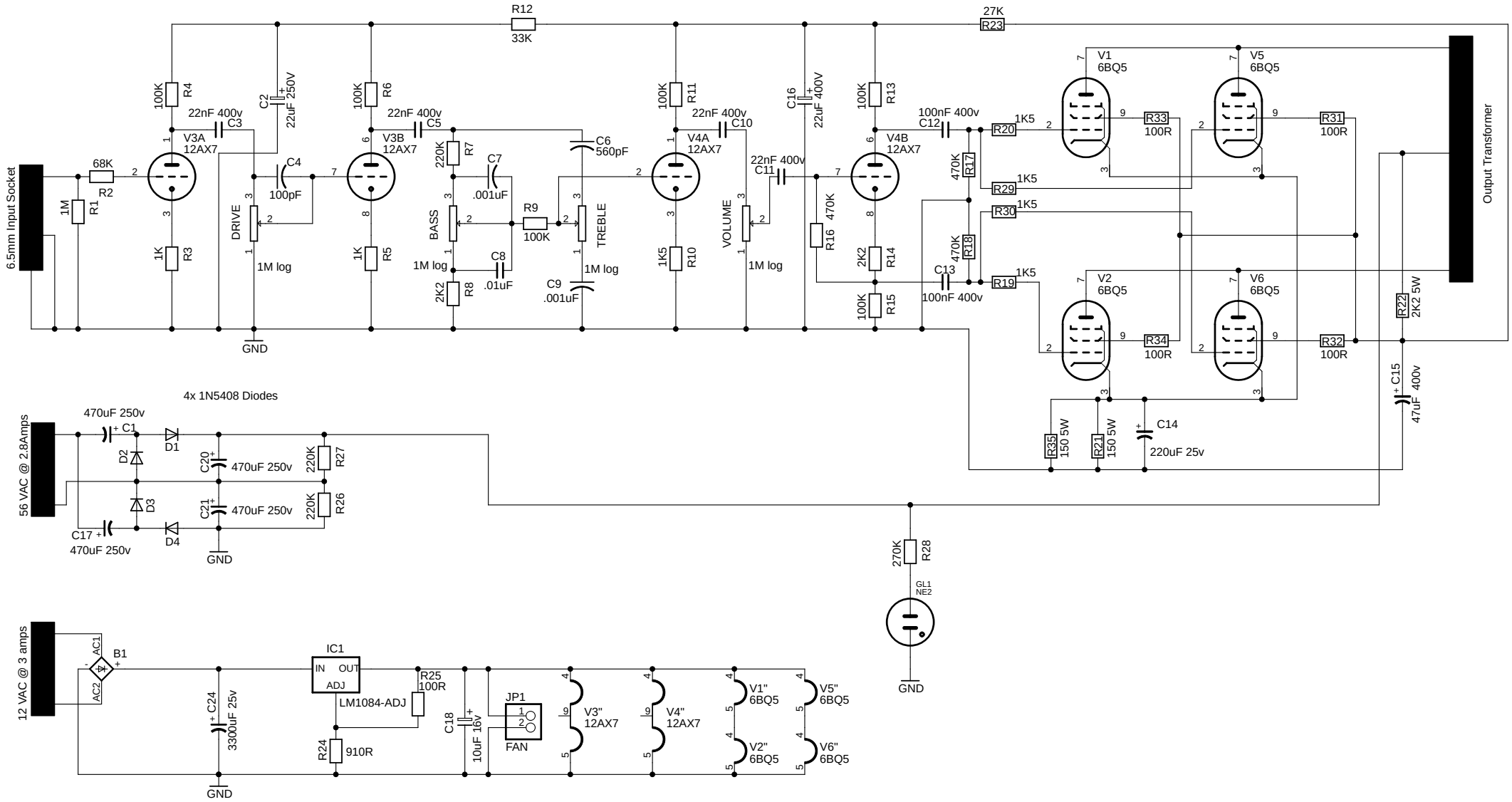
6.5mm Input Socket
68K
R2
1M
R1
100K
R4
22nF 400v
C3
V3A
12AX7
1K
R3
C2
22uF 250V
C4
100pF
DRIVE
1M log
GND
R12
33K
100K
R6
22nF 400v
C5
V3B
12AX7
1K
R5
220K
R7
C7
.001uF
BASS
1M log
C8
.01uF
2K2
R8
R9
100K
C6
560pF
TREBLE
1M log
C9
.001uF
100K
R11
22nF 400v
C10
V4A
12AX7
1K5
R10
VOLUME
1M log
C16
22uF 400V
22nF 400v
C11
470K
R16
100K
R13
V4B
12AX7
2K2
R14
100K
R15
27K
R23
100nF 400v
C12
470K
R17
470K
R18
C13
100nF 400v
1K5
R20
1K5
R29
1K5
R30
1K5
R19
V1
6BQ5
V5
6BQ5
V2
6BQ5
V6
6BQ5
R33
100R
R31
100R
R34
100R
R32
100R
Output Transformer
R22
2K2 5W
C15
47uF 400v
R35
150 5W
R21
150 5W
C14
220uF 25v
4x 1N5408 Diodes
56 VAC @ 2.8Amps
470uF 250v
C1
D1
D2
D3
D4
C20
470uF 250v
C21
470uF 250v
220K
R27
220K
R26
C17
470uF 250v
GND
270K
R28
GL1
NE2
GND
12 VAC @ 3 amps
AC1
AC2
B1
C24
3300uF 25v
IC1
IN
OUT
ADJ
LM1084-ADJ
R25
100R
R24
910R
C18
10uF 16v
JP1
FAN
V3"
12AX7
V4"
12AX7
V1"
6BQ5
V2"
6BQ5
V5"
6BQ5
V6"
6BQ5
GND